K-DRG DRVS HANSA

Pressure regulators with continuous pressure supply

属性

入口压力	Max. 16 bar
温度范围	-10 °C to +50 °C
适用介质	压缩空气
接口螺纹	Material: Die-cast zinc
壳体	Material: Grivory® (PA 66)
膜片	NBR
自身空气消耗	only G3/4, G1 Max. 1.5 l/min (depending on secondary pressure)
流量值测量	At P1 = 10 bar, P2 = 6.3 bar and pressure drop Δp = 1 bar



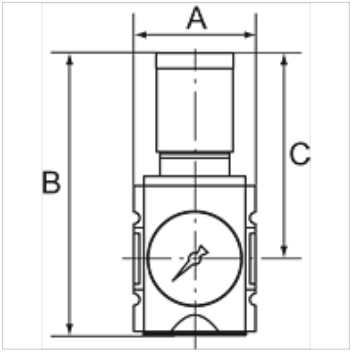

提示

其它数据应客户要求提供。

描述

Diaphragm pressure regulators with self-relieving design and excellent flow ratesin modern design for mounting side by side. By assembling two or more controllers together, it is possible to supply several working air circuits with different output pressures via a single supply line. The regulator button can be latched and locked.

订购指南

The price does not include a key lock. Please order separately.

货品

名称	螺纹	调节范围	流量 (L/min)	A (mm)	B	C (mm)	结构尺寸
K- 07 25 02 51	G 1/4	0.1 - 1 bar	2200	52,0	128,5 mm	95,5	1
K- 07 25 02 52	G 1/4	0.1 - 2 bar	2200	52,0	128,5 mm	95,5	1
K- 07 25 02 53	G 1/4	0.2 - 4 bar	2200	52,0	128,5 mm	95,5	1
K- 07 25 02 54	G 1/4	0.5 - 8 bar	2200	52,0	128,5 mm	95,5	1
K- 07 25 02 55	G 1/4	0.5 - 10 bar	2200	52,0	128,5 mm	95,5	1
K- 07 25 02 56	G 1/4	0.5 - 16 bar	2200	52,0	128,5 mm	95,5	1
K- 07 25 02 69	G 3/8	0.1 - 1 bar	2600	52,0	128,5 mm	95,5	1
K- 07 25 02 70	G 3/8	0.1 - 2 bar	2600	52,0	128,5 mm	95,5	1
K- 07 25 02 71	G 3/8	0.2 - 4 bar	2600	52,0	128,5 mm	95,5	1
K- 07 25 02 72	G 3/8	0.5 - 8 bar	2600	52,0	128,5 mm	95,5	1
K- 07 25 02 73	G 3/8	0.5 - 10 bar	2600	52,0	128,5 mm	95,5	1
K- 07 25 02 74	G 3/8	0.5 - 16 bar	2600	52,0	128,5 mm	95,5	1
K- 07 25 02 57	G 3/8	0.1 - 1 bar	4300	63,0	149,5 mm	110,0	2
K- 07 25 02 58	G 3/8	0.1 - 2 bar	4300	63,0	149,5 mm	110,0	2
K- 07 25 02 59	G 3/8	0.2 - 4 bar	4300	63,0	149,5 mm	110,0	2
K- 07 25 02 60	G 3/8	0.5 - 8 bar	4300	63,0	149,5 mm	110,0	2
K- 07 25 02 61	G 3/8	0.5 - 10 bar	4300	63,0	149,5 mm	110,0	2
K- 07 25 02 62	G 3/8	0.5 - 16 bar	4300	63,0	149,5 mm	110,0	2
K- 07 25 02 63	G 1/2	0.1 - 1 bar	5000	63,0	149,5 mm	110,0	2
K- 07 25 02 64	G 1/2	0.1 - 2 bar	5000	63,0	149,5 mm	110,0	2
K- 07 25 02 65	G 1/2	0.2 - 4 bar	5000	63,0	149,5 mm	110,0	2
K- 07 25 02 66	G 1/2	0.5 - 8 bar	5000	63,0	149,5 mm	110,0	2
K- 07 25 02 67	G 1/2	0.5 - 10 bar	5000	63,0	149,5 mm	110,0	2
K- 07 25 02 68	G 1/2	0.5 - 16 bar	5000	63,0	149,5 mm	110,0	2

附件

K-STECKSCHLOSS	Key lock

备件

K-HALTERBAUSATZ HANSA	Holder HANSA
K-SCHALTTAFELMUTTER HANSA	Nut HANSA
K-DICHTSATZ HANSA	Set of seals HANSA

尽管经过了仔细审阅,但我们无法完全排除发生错误的可能,对所提供的信息数据本公司不承担任何责任。