K-FI SPEZI PC-BEHAELTER H STANDAD

Special filters with polycarbonate bowl, with semi-automatic drain valve to G 1/2 and manual drain valve from G 3/4

属性

入口压力	Max. 16 bar (polycarbonate bowl / bowl guard), Max. 25 bar (metal bowl)
介质温度	max. 50 °C
环境温度	Max. 50 °C
效率	99.999 %
过滤器元件中的气孔宽度	0.01 µm
壳体	Die-cast zinc, painted silver
流量值测量	At P2 = 6 bar and pressure drop Δp = 1 bar



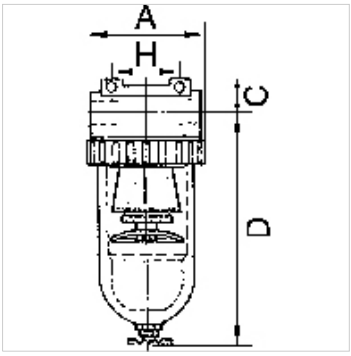

提示

其它数据应客户要求提供。

描述

For all applications with particularly strict compressed air purity requirements. The separating efficiency of these filters permits very fine oil vapour particles and micro-fine suspended particles to be filtered. A standard filter should always be connected upstream to trap coarse impurities and protect the micro-filter inserts.

货品

名称	螺纹	流量 (L/min)	A (mm)	C (mm)	D (mm)	H (mm)	DN
K- 07 25 10 76	G 3/8	380	48,0	14,0	131,6	38,0	6
K- 07 25 10 83	G 3/4	7000	133,0	36,0	206,0	134,0	20
K- 07 25 10 86	G 1	7000	133,0	36,0	206,0	120,0	25

备件

K-HALTERBAUSATZ STANDARD	Holder
K-FILTERELEMENT STANDARD	Filter element
K-SCHUTZKORB G	Protective cage
K-XV AGM MS NI	Double nipples, parallel male thread, nickel-plated brass
K-LOESBARE DOPPELNIPPEL MS	Double nipples

尽管经过了仔细审阅,但我们无法完全排除发生错误的可能,对所提供的信息数据本公司不承担任何责任。