K-FI REGL METALLBE MANO STANDARD-MI

Filter regulators with metal bowl, incl. pressure gauge and panel nut

属性

入口压力	Max. 16 bar (polycarbonate bowl), Max. 25 bar (metal bowl)
介质温度	max. 60 °C
环境温度	Max. 60 °C
流量	350 l/min
过滤器元件中的气孔宽度	5 µm
密封材料	NBR
弹簧罩	POM-brass
壳体	Die-cast zinc, painted silver
Drain valve	Semi-automatic for variant with polycarbonate bowl, Manual for variant with metal bowl
流量值测量	At P1 = 8 bar, P2 = 6 bar and pressure drop Δp = 1 bar

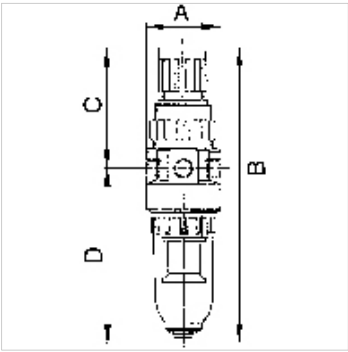

提示

其它数据应客户要求提供。

描述

Compact, reversible diaphragm pressure regulators, independent of inlet pressure, with self-relieving design, combined with a centrifugal separator.
The pressure setting can be locked by pushing the knob down.

货品

名称	螺纹	调节范围	A (mm)	B	C (mm)	D (mm)	DN
K- 07 25 06 65	G 1/8	0.5 - 10 bar	40,0	163,5 mm	65,0	98,5	5
K- 07 25 06 66	G 1/4	0.5 - 10 bar	40,0	163,5 mm	65,0	98,5	5

备件

K-HALTERBAUSATZ	Holder
K-SCHALTTAFELMUTTER	Nut
K-ERSATZBEHAELTER MULTI MINI	Spare tank »multifix-mini« & »standard-mini«
K-PC-BEHAELTER FILTER MULTIFIX	Polycarbonate tank filter
K-FILTERELEMENT	Filter element
K-AUTOMAT ABLASSVENTIL	Automatic drain valve
K-LOESBARE DOPPELNIPPEL MS	Double nipples
K-XV AGM MS NI	Double nipples, parallel male thread, nickel-plated brass
K-VERSCHLEI-SATZ	Set of wearing parts

尽管经过了仔细审阅,但我们无法完全排除发生错误的可能,对所提供的信息数据本公司不承担任何责任。