K-FI REGL PC-BEHAEL MANO VARIOBLOC

Filter regulators with polycarbonate bowl and pressure gauge

HANSA FLEX

属性

入口压力	Max. 16 bar (polycarbonate bowl), Max. 20 bar (metal bowl)
介质温度	max. 50 °C
环境温度	Max. 50 °C (polycarbonate bowl), Max. 80 °C (metal bowl)
过滤器元件中的气孔宽度	40 µm
密封材料	NBR
弹簧罩	POM
壳体	Die-cast zinc
膜片	NBR
Drain valve	Manual
流量值测量	At P1 = 10 bar, P2 = 6 bar and pressure drop Δp = 1 bar



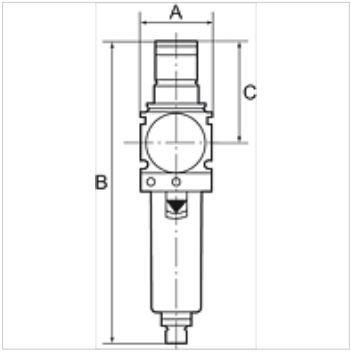

提示

其它数据应客户要求提供。

描述

Reversible diaphragm pressure regulators, independent of inlet pressure, with self-relieving design, combined with a centrifugal separator. The pressure setting can be locked by pushing the knob down. Approved series in modern industrial design, with the following key benefits: Simple handling, Convenient modular assembly thanks to innovative fasteners, Excellent flow values.

订购指南

Filter regulators are also available with bowl guard or metal bowl. Filter regulators are also available in lockable version. Please ask for more information.

附加信息

Filter regulators are also available with bowl guard or metal bowl. Filter regulators are also available in lockable version. Please ask for more information.

货品

名称	螺纹	调节范围	流量 (L/min)	A (mm)	B	C (mm)
K- 07 25 06 85	G 1/4	0.5 - 10 bar	2000	48,0	203,0 mm	68,0
K- 07 25 06 87	G 3/8	0.5 - 10 bar	3000	48,0	203,0 mm	68,0
K- 07 25 06 89	G 1/2	0.5 - 10 bar	5500	70,0	273,0 mm	98,0
K- 07 25 06 91	G 3/4	0.5 - 10 bar	6500	70,0	273,0 mm	98,0
K- 07 25 06 93	G 1	0.5 - 10 bar	6500	124,0	273,0 mm	98,0

备件

K-VERSCHLEI-SATZ VARIOBLOC	Set of wearing parts
K-ERSATZBEHAELTER VARIOBLOC POLY	Spare tank Polycarbonat
K-FILTERELEMENT VARIOBLOC	Filter element
K-ABLASSVENTIL AUTO	Fully-automatic drain valve with Adapter G 1/8

尽管经过了仔细审阅,但我们无法完全排除发生错误的可能,对所提供的信息数据本公司不承担任何责任。