K-NEBELOELER PC-BEHAELTER VARIOBLOC

Oil-mist lubricators with polycarbonate bowl

HANSA-FLEX

属性

入口压力	Max. 16 bar (polycarbonate bowl), Max. 20 bar (metal bowl)
介质温度	max. 50 °C
环境温度	Max. 50 °C (polycarbonate bowl), Max. 80 °C (metal bowl)
密封材料	NBR
壳体	Die-cast zinc
泄水头	PA
油种类	CL 32 acc. to DIN 51517 - ISO VG 32
流量值测量	At P1 = 6 bar and pressure drop Δp = 1 bar



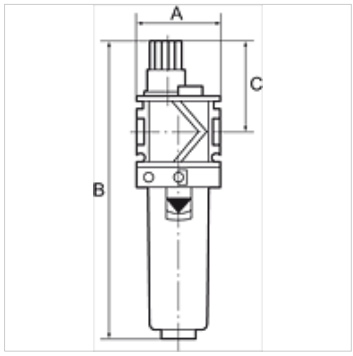

提示

其它数据应客户要求提供。

描述

Proportional lubricators, oil can be filled under pressure. Approved series in modern industrial design, with the following key benefits: Simple handling, Convenient modular assembly thanks to innovative fasteners, Excellent flow values.

订购指南

Oil-mist lubricators are also available with bowl guard or metal bowl.

货品

名称	螺纹	流量 (L/min)	A (mm)	B	C (mm)
K- 07 25 09 13	G 1/4	3400	48,0	171,0 mm	52,0
K- 07 25 09 15	G 3/8	4400	48,0	171,0 mm	52,0
K- 07 25 09 17	G 1/2	4600	70,0	224,0 mm	57,0
K- 07 25 09 19	G 3/4	7500	70,0	224,0 mm	57,0
K- 07 25 09 21	G 1	7500	124,0	224,0 mm	57,0

备件

K-ERSATZBEHAELTER VARIOBLOC POLY	Spare tank Polycarbonat
K-TROPFAUFSATZ VARIOBLOC	Drip attachment
K-TROPFAUFSATZ METALL	Drip attachment metal

尽管经过了仔细审阅,但我们无法完全排除发生错误的可能,对所提供的信息数据本公司不承担任何责任。