K-WTEH 3-TLG MET SICH TROPF VARIOBL

Service units, 3-piece with metal bowl, incl. sight glass and metal sight dome

HANSA FLEX

属性

入口压力	Max. 16 bar (polycarbonate bowl), Max. 20 bar (metal bowl)
介质温度	max. 50 °C
环境温度	Max. 50 °C (polycarbonate bowl), Max. 80 °C (metal bowl)
过滤器元件中的气孔宽度	40 µm
密封材料	NBR
弹簧罩	POM
壳体	Die-cast zinc
膜片	NBR
泄水头	PA
Drain valve	Manual
流量值测量	At P1 = 10 bar, P2 = 6 bar and pressure drop Δp = 1 bar



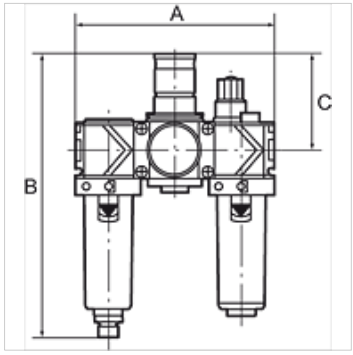

提示

其它数据应客户要求提供。

描述

Two or three-piece service units consisting of a reversible diaphragm pressure regulator, independent of inlet pressure, with self-relieving design, combined with a centrifugal separator and a proportional lubricator. Approved series in modern industrial design, with the following key benefits: Simple handling, Convenient modular assembly thanks to innovative fasteners, Excellent flow values.

订购指南

Service units are also available with bowl guard or metal bowl. Service units are also available in other control ranges (0.5 - 6 bar and 0.5 - 16 bar) and in lockable version. Please ask for more information.

附加信息

Service units are also available with bowl guard or metal bowl. Service units are also available in other control ranges.

货品

名称	螺纹	调节范围	流量 (L/min)	A (mm)	B	C (mm)
K- 07 25 14 12	G 1/4	0.5 - 10 bar	1500	144,0	201,0 mm	68,0
K- 07 25 14 14	G 3/8	0.5 - 10 bar	1800	144,0	201,0 mm	68,0
K- 07 25 14 16	G 1/2	0.5 - 10 bar	3400	210,0	274,0 mm	98,0
K- 07 25 14 18	G 3/4	0.5 - 10 bar	5000	210,0	274,0 mm	98,0
K- 07 25 14 20	G 1	0.5 - 10 bar	5000	264,0	274,0 mm	98,0

备件

K-VERSCHLEI-SATZ VARIOBLOC	Set of wearing parts
K-FILTERELEMENT VARIOBLOC	Filter element
K-ERSATZBEHAELTER VARIOBLOC POLY	Spare tank Polycarbonat
K-TROPFAUFSATZ VARIOBLOC	Drip attachment
K-ABLASSVENTIL AUTO	Fully-automatic drain valve with Adapter G 1/8

尽管经过了仔细审阅,但我们无法完全排除发生错误的可能,对所提供的信息数据本公司不承担任何责任。