K-DRV SCHNVERSCHR V SCHLITZ

Unidirectional flow control valves, incoming air restriction (»V«), quick-lock screw fitting

属性

工作压力	最大 10 巴
温度范围	0 °C to +70 °C
空心螺钉,摆臂,调节螺钉	Nickel-plated brass
内部部件	Brass with a bare metal surface
O 形圈凸缘密封件	NBR
密封(防丢失)	Polyamide (glass fibre-reinforced)



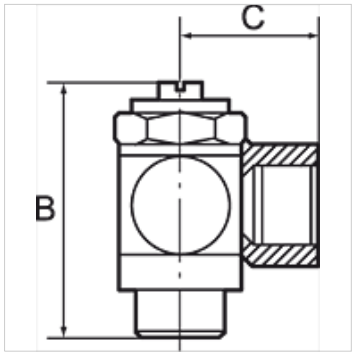

提示

其它数据应客户要求提供。

描述

For fine regulation of a cylinder piston speed in the forward and return motion and precise control of flow rates. Designed as a banjo-type valve with a hollow bolt and ring piece. Can be screwed directly onto the valve or cylinder to restrict the incoming air. Compact type of construction, also ideal where space is restricted.

货品

名称	C (mm)	用于软管	螺纹	SW	B (mm)
K- 07 15 05 63	18,0	4 mm / 2,5 mm	M 5	8 mm	24,5
K- 07 15 05 64	19,0	5 mm / 3 mm	M 5	8 mm	24,5
K- 07 15 05 65	19,0	6 mm / 4 mm	M 5	8 mm	24,5
K- 07 15 05 71	23,0	5 mm / 3 mm	G 1/8	14 mm	32,0
K- 07 15 05 72	25,0	6 mm / 4 mm	G 1/8	14 mm	32,0
K- 07 15 05 73	25,0	8 mm / 6 mm	G 1/8	14 mm	32,0
K- 07 15 05 68	26,5	6 mm / 4 mm	G 1/4	17 mm	40,0
K- 07 15 05 69	27,5	8 mm / 6 mm	G 1/4	17 mm	40,0
K- 07 15 05 67	28,5	10 mm / 8 mm	G 1/4	17 mm	40,0
K- 07 15 05 74	30,5	10 mm / 8 mm	G 3/8	20 mm	50,0

尽管经过了仔细审阅,但我们无法完全排除发生错误的可能,对所提供的信息数据本公司不承担任何责任。