K-WKV 2/2 BEIDS STECK

2/2-way toggle valves, discharge port on both sides, plug-in connector

属性

工作压力	最大8巴
温度范围	0 °C to +70 °C
配电板螺纹	M 12 x 0.75 (sheet thickness max. 4 mm)
内部部件	Brass with a bare metal surface
密封材料	NBR
空心螺钉,摆臂,摇转柄	Nickel-plated brass
密封(防丢失)	Polyamide (glass fibre-reinforced)



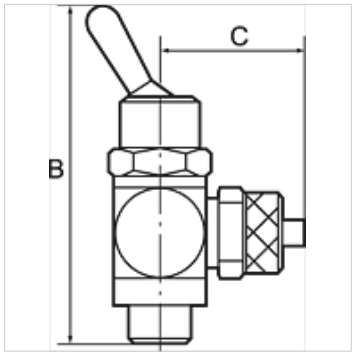

提示

其它数据应客户要求提供。

描述

Manually operated toggle valves, 2/2 and 3/2-way types. For all applications where compressed air must be switched on or off quickly and easily or a cylinder operated manually. Designed as a banjo-type valve with a hollow bolt and ring piece. Suitable for screwing directly into the equipment or for panel mounting. Compact type of construction, also ideal where space is restricted.

货品

名称	规格	C (mm)	用于软管	螺纹	SW	B (mm)
K- 07 15 07 17	2/2-way	19,5	4 mm	G 1/8	14 mm	55,0
K- 07 15 07 18	2/2-way	22,0	6 mm	G 1/8	14 mm	55,0
K- 07 15 07 19	2/2-way	22,5	8 mm	G 1/8	14 mm	55,0
K- 07 15 07 15	2/2-way	23,5	6 mm	G 1/4	17 mm	60,0
K- 07 15 07 16	2/2-way	24,0	8 mm	G 1/4	17 mm	60,0
K- 07 15 07 14	2/2-way	26,5	10 mm	G 1/4	17 mm	60,0

尽管经过了仔细审阅,但我们无法完全排除发生错误的可能,对所提供的信息数据本公司不承担任何责任。