K-WTST SAFETY BK SCHA AN DR HANSA

SAFETY service unit sets, comprising a ball valve with silencer, start-up valve and pressure regulator

属性

入口压力	2.5 - 16 bar
出口压力	0.5 - 8 bar
温度范围	-10 °C to +50 °C
适用介质	压缩空气
密封材料	NBR
接口螺纹	Material: Die-cast zinc
容器	Polycarbonate (with bayonet lock) and bowl guard
过滤器元件	Cellpor (PE) 5 µm
壳体	Material: Grivory® (PA 66)
膜片	NBR
自身空气消耗	Max. 1.5 l/min (depending on secondary pressure)
流量值测量	At P1 = 10 bar, P2 = 6.3 bar and pressure drop Δp = 1 bar
排气接口球阀	Silencer

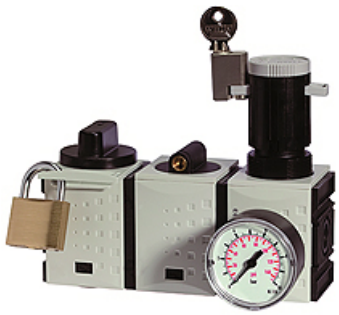

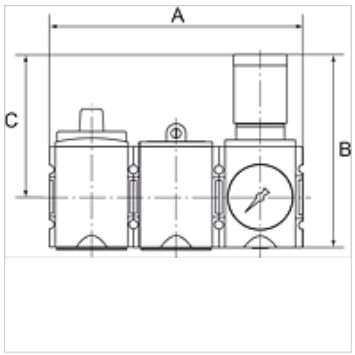

提示

其它数据应客户要求提供。

描述

These compressed air service unit sets, comprising a ball valve with silencer, a start-up valve and one out of a pressure regulator, filter regulator or service unit, meet even the strictest requirements for operating reliability and accident prevention!

订购指南

The price does not include a key lock and padlock. Please order separately. For accessories and spare parts, refer to individual components: ball valve, start-up valve, pressure regulator, filter regulator, 2-piece service unit

货品

名称	螺纹	调节范围	流量 (L/min)	A (mm)	B	C (mm)
K- 07 25 15 20	G 1/4	2.5 - 8 bar	2000	156,0	128,5 mm	95,5
K- 07 25 15 21	G 3/8	2.5 - 8 bar	2000	156,0	128,5 mm	95,5
K- 07 25 15 22	G 3/8	2.5 - 8 bar	4300	189,0	149,5 mm	110,0
K- 07 25 15 23	G 1/2	2.5 - 8 bar	4300	189,0	149,5 mm	110,0
K- 07 25 15 24	G 3/4	2.5 - 8 bar	10000	255,0	191,0 mm	137,0
K- 07 25 15 25	G 1	2.5 - 8 bar	10000	255,0	191,0 mm	137,0

附件

K-STECKSCHLOSS	Key lock
K-VORHAENGESCHLOSS	Padlock

尽管经过了仔细审阅,但我们无法完全排除发生错误的可能,对所提供的信息数据本公司不承担任何责任。