K-WTST SAFETY BKR SCHA AN DR MULTI

SAFETY service unit sets, comprising a ball valve with silencer, start-up valve and pressure regulator with lock cylinder

HANSA-FLEX

属性

入口压力	2 - 16 bar
出口压力	0.5 - 10 bar
温度范围	Max. 60 °C
适用介质	压缩空气
密封材料	NBR
容器	Polycarbonate (with bayonet lock) and bowl guard
弹簧罩	POM
过滤器元件	Cellpor (PE) 5 µm
壳体	Die-cast zinc
膜片	NBR
Drain valve	Semi-automatic
流量值测量	At P1 = 8 bar, P2 = 6 bar and pressure drop Δp = 1 bar
更多注明信息	see data sheets of the individual components (on request)
排气接口球阀	Silencer



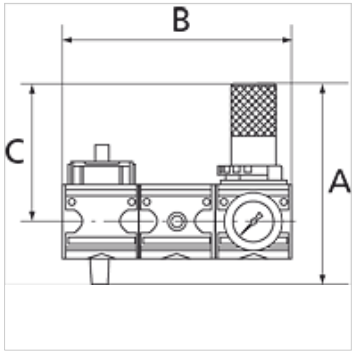

描述

These compressed air service unit sets, comprising a ball valve with silencer, a start-up valve and one out of a pressure regulator, filter regulator or service unit, meet even the strictest requirements for operating reliability and accident prevention!

订购指南

The price does not include a padlock. Please order separately. For accessories and spare parts, refer to individual components: ball valve, start-up valve, pressure regulator, filter regulator, 2-piece service unit.

货品

名称	螺纹	调节范围	流量 (L/min)	A (mm)	B	C (mm)
K- 07 25 15 11	G 1/4	2 - 10 bar	1000	128,0	137,8 mm	94,0
K- 07 25 15 12	G 1/2	2 - 10 bar	4000	189,0	200,8 mm	122,0
K- 07 25 15 13	G 1	2 - 10 bar	12000	241,7	282,8 mm	157,0

尽管经过了仔细审阅,但我们无法完全排除发生错误的可能,对所提供的信息数据本公司不承担任何责任。