K-ZFL ABSP-KLAPPEN EINFACH

Butterfly valves, with single-acting actuator - spring to close, min. pilot pressure 5 bar

HANSA FLEX

属性	
结构类型	Pneumatic actuators, in double- or single acting version
工作压力	Max. 16 bar
工作温度	-15 °C to +120 °C
适用介质	Water / steam, salt water, salt water, ester, ketone, alkali, caustic soda, sodium hydroxide. Not recommended for hydrocarbons
控制压力	5.5 bar
阀门适配器	Supplied as standard, operated by a 3/2- or 5/2-way valve
旋转角	90 °
驱动器	aluminium eloxed
驱动器密封件	NBR
壳体	Grey cast iron GG25 epoxy resin coated, RAL 5015
密封	EPDM
轴	SS416
轴封	EPDM
触发	



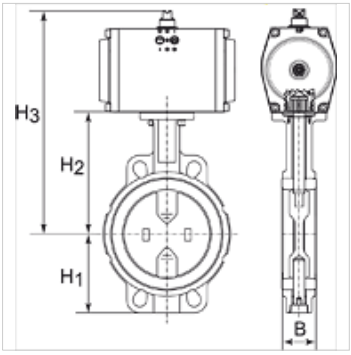

提示

其它数据应客户要求提供。

货品

名称	圆盘	DN	B (mm)	H1 (mm)	H2 (mm)	H3 (mm)	L (mm)
K- 07 30 03 36	Stainless Steel CF8M/1.4404	40	38,0	68,0	108,0	238,0	94,0
K- 07 30 03 37	Stainless Steel CF8M/1.4404	50	47,0	71,0	143,0	273,0	100,0
K- 07 30 03 38	Stainless Steel CF8M/1.4404	65	49,0	78,0	155,0	285,0	115,0
K- 07 30 03 39	Stainless Steel CF8M/1.4404	80	47,0	89,0	162,0	292,0	127,0
K- 07 30 03 40	Stainless Steel CF8M/1.4404	100	56,0	102,0	178,0	348,0	163,0
K- 07 30 03 42	Stainless Steel CF8M/1.4404	125	59,0	123,0	191,0	361,0	190,0
K- 07 30 03 44	Stainless Steel CF8M/1.4404	150	59,0	138,0	265,0	395,0	216,0

尽管经过了仔细审阅,但我们无法完全排除发生错误的可能,对所提供的信息数据本公司不承担任何责任。