K-SCHL-AUFROLLER SCHWEISS

Hose reel, welding type

HANSA FLEX

属性

软管	Welding hose for oxygen and acetylene, red and blue, made from synthetic rubber.
工作压力	最大 10 巴
固定	Wall, floor or ceiling
入口	Oxygen G 1/4 male, right-hand thread with 60° inside cone, Acetylene G 3/8 male, left-hand thread with 60° inside cone



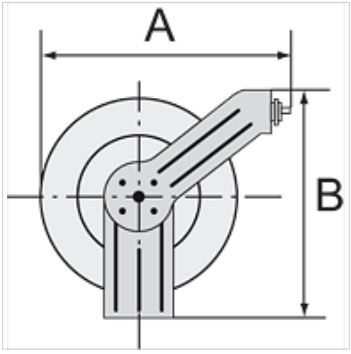

提示

其它数据应客户要求提供。

描述

Heavy-duty steel design for industrial applications. Blue, powder-coated housing. Special reel guide prevents excessive wear on the hose. An automatic latching mechanism allows the hose to be engaged at any length. Enclosed spring. Precise locking device for continuous feeding or latching mechanism.

货品

名称	软管尺寸	高度 (mm)	直径 (mm)	软管长度 (m)
K- 07 10 06 28	Oxygen: 16.5 mm x 6 mm, Acetylene: 17 mm x 10 mm	360	320	15

尽管经过了仔细审阅,但我们无法完全排除发生错误的可能,对所提供的信息数据本公司不承担任何责任。