K-S-BKR M ENTL-BOHR ABSCHL

Safety ball valves, lockable, with relief port

HANSA-FLEX

属性

工作温度	-10 °C to + 100 °C (depending on operating pressure)
排气孔	M 5 (>1": Relief port G 1/4")
螺纹描述	Rp thread acc. to EN 10226
壳体	Nickel-plated brass
手柄	Steel - PVC coated
球体	hardchrome-plated brass
球密封	PTFE
主轴密封	PTFE



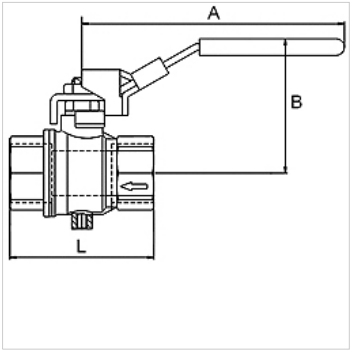

提示

G thread acc. to DIN EN ISO 228-1, with ISO flange plate (acc. to ISO 5211)
其它数据应客户要求提供。

描述

2/2-way safety ball valves, two parts, made of nickel-plated brass. Specially designed for pneumatic applications.
The valve shuts off the supply line and bleds the application area. Lockable hand lever in closed position.

附加信息

The price does not include a padlock. Please order separately.

货品

名称	DN	螺纹	PN (bar)	A (mm)	B (mm)	L (mm)
K- 07 30 29 29	8	Rp 1/4	14	96,0	49,0	45,0
K- 07 30 29 30	10	Rp 3/8	14	96,0	49,0	45,0
K- 07 30 29 31	15	Rp 1/2	14	96,0	51,0	59,0
K- 07 30 29 32	20	Rp 3/4	14	117,0	60,0	64,0
K- 07 30 29 33	25	Rp 1	14	117,0	64,0	81,0
K- 07 30 29 34	32	Rp 1 1/4	14	157,0	80,0	93,0
K- 07 30 29 35	40	Rp 1 1/2	14	157,0	86,0	102,0
K- 07 30 29 36	50	Rp 2	14	157,0	93,0	121,0

附件

K-VORHAENGESCHLOSS	Padlock

尽管经过了仔细审阅,但我们无法完全排除发生错误的可能,对所提供的信息数据本公司不承担任何责任。