K-DV GEW B SCHLITZ

Bidirectional flow control valves, air restriction at both ends (»B«), screw connection

属性

工作压力	最大 10 巴
温度范围	0 °C to +70 °C
空心螺钉,摆臂,调节螺钉	Nickel-plated brass
内部部件	Brass with a bare metal surface
O 形圈凸缘密封件	NBR
密封(防丢失)	Polyamide (glass fibre-reinforced)



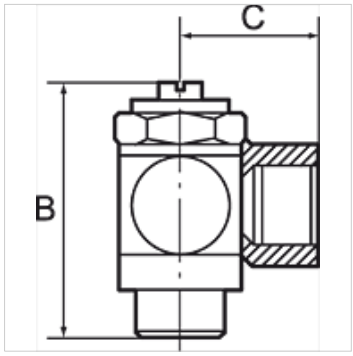

提示

其它数据应客户要求提供。

描述

For regulation of a cylinder piston speed at both ends and control of flow rates. Designed as a banjo-type valve with a hollow bolt and ring piece for mounting directly. Compact type of construction, also ideal where space is restricted.

货品

名称	接口	C (mm)	螺纹	SW	B (mm)
K- 07 15 05 53	M 5 female thread	11,5	M 5	8 mm	24,5
K- 07 15 05 58	G 1/8 female thread	16,0	G 1/8	14 mm	32,0
K- 07 15 05 54	G 1/4 female thread	22,0	G 1/4	17 mm	40,0
K- 07 15 25 26	G 3/8 female thread	26,0	G 3/8	20 mm	50,0
K- 07 15 25 25	G 1/2 female thread	32,0	G 1/2	26 mm	61,0

尽管经过了仔细审阅,但我们无法完全排除发生错误的可能,对所提供的信息数据本公司不承担任何责任。